S28585225
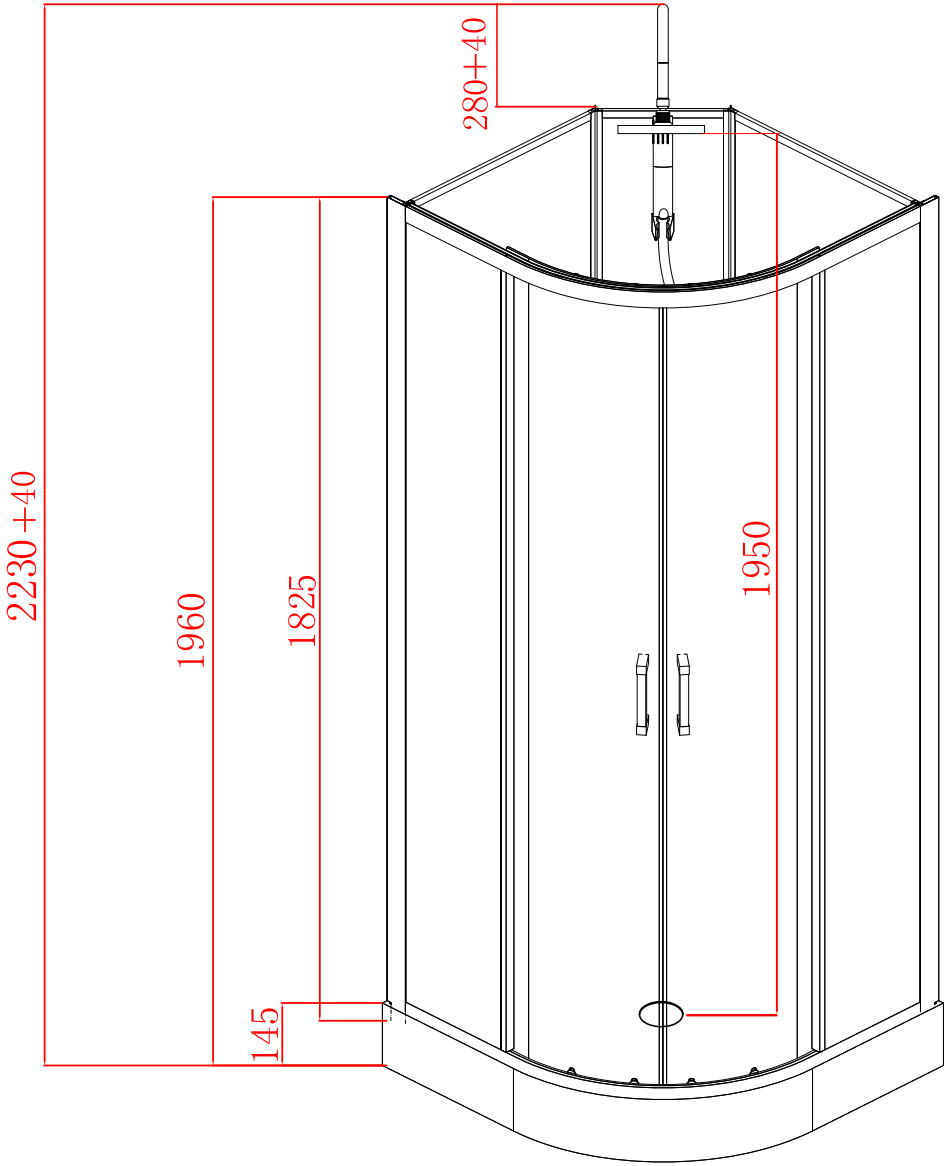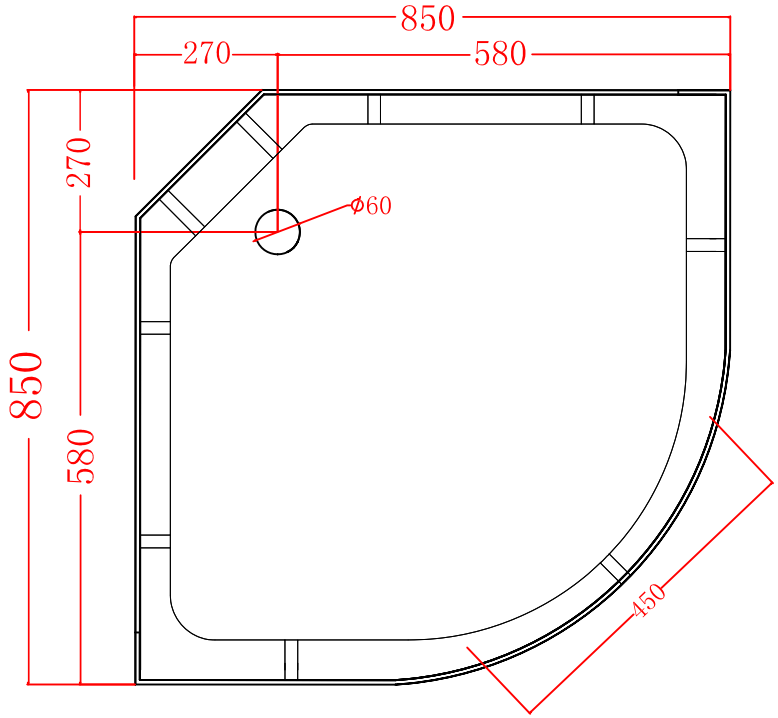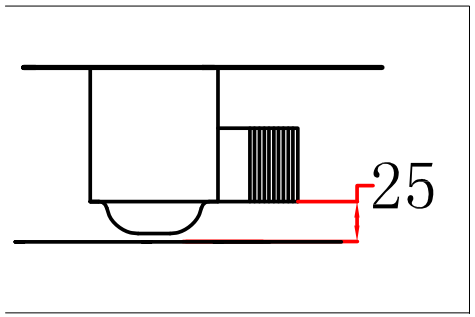
DIMENSIONS(mm)